TVR

TVR

OWNERS HANDBOOK

ISSUED BY
TVR ENGINEERING LIMITED
BLACKPOOL
ENGLAND

TELEGRAMS · TEEVAR

TELEPHONE 0253-56151

Introduction

Designed and built to give long and constant trouble-free service, your TVR embodies many new safety features, the very presence of which will add to your confidence.

Read carefully the contents of this handbook, which gives, in the simplest possible terms, information vital to the proper operation, care and regular maintenance of the car.

The TVR 2500M complies with, and in many cases exceeds, all current U.S. Federal and State Regulations concerning Safety, Engine Crankcase Emission and Fuel Evaporative Controls.

Important

In all communications relating to Service or Spares, please quote the Commission Number (Chassis Number)

LOCATION OF COMMISSION AND UNIT NUMBERS

Note. L.H. and R.H. refer to Left-hand and Right-hand side of the vehicle viewed from the driving position.

Commission — On Scuttle Panel (May be seen by lifting the bonnet)

Engine Number — On L.H. side of Cylinder Block — 2500M
On rear of Cylinder Block — 3000M

Gearbox Number — On L.H. side of Housing

Rear Axle Number — On Hypoid Housing Flange

SPARE PARTS SERVICE

Replacement parts are not supplied from the factory direct to the general public, but are directed through Distributors who, in turn, supply their Dealers.

The descriptions and illustrations appearing in this book are not binding. The MANUFACTURER, therefore, reserves the right — whilst retaining the basic features of the Models herein described and illustrated — to make at any time, without necessarily bringing this book up-to-date, any alteration to units, parts or accessories deemed convenient for improvement or for any manufacturing or commercial reason.

List of Sections

	Page
Introduction	3
Location of unit numbers	4
Controls, Instruments and Indicators	6
Seats	9
Wheels and Tyres	11
Cooling System	12
Electrical	15
Driving Recommendations	17
Emission and Evaporative Control System – 2500M	18
Regular Maintenance	23
Lubricants and Anti-freeze solutions	38
Fault Finding	39
Specification	42
Index	43

RIGHT HAND DRIVE (Fig. 1)

1. BATTERY CONDITION INDICATOR
2. TEMPERATURE GAUGE (WATER)
3. HEATED REAR WINDOW WARNING LIGHT (EARLY 3000M)
4. OIL PRESSURE GAUGE
5. FUEL GAUGE
6. TACHOMETER
7. SPEEDOMETER
8. BRAKE FAIL/HANDBRAKE WARNING LIGHT
9. WINDSCREEN WIPER SWITCH
10. WINDSCREEN WASHER SWITCH
11. HOOD RELEASE CATCH
12. INDICATOR SWITCH
13. HEATER CONTROL
14. HEATER OUTLET NOZZLE
15. IGNITION SWITCH/STEERING LOCK
16. DIP/MAIN BEAM AND FLASHER SWITCH
17. HAZARD WARNING LIGHT
18. INDICATOR WARNING LIGHT
19. MAIN BEAM WARNING LIGHT
20. HEATER BLOWER SWITCH
21. CIGAR LIGHTER
22. LIGHT SWITCH
23. IGNITION LIGHT
24. PANEL LIGHT SWITCH
25. HEATED REAR WINDOW WARNING LIGHT (3000M)
26. HAZARD WARNING SWITCH
27. HOOD RELEASE
28. HEATED REAR WINDOW SWITCH

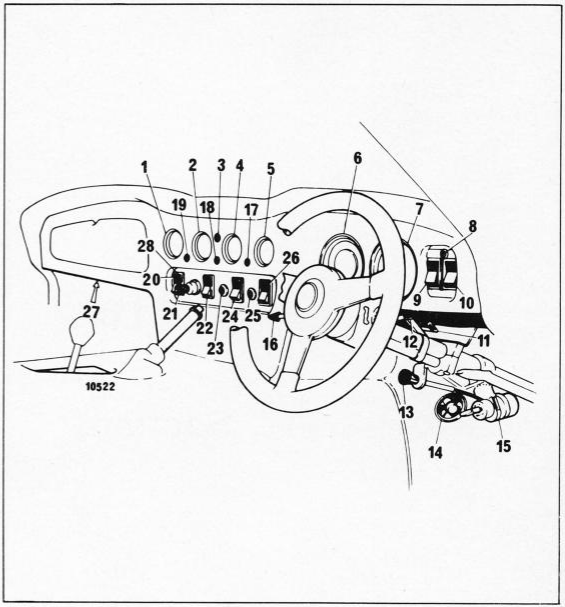

Fig. 1

CONTROLS, INSTRUMENTS AND INDICATORS

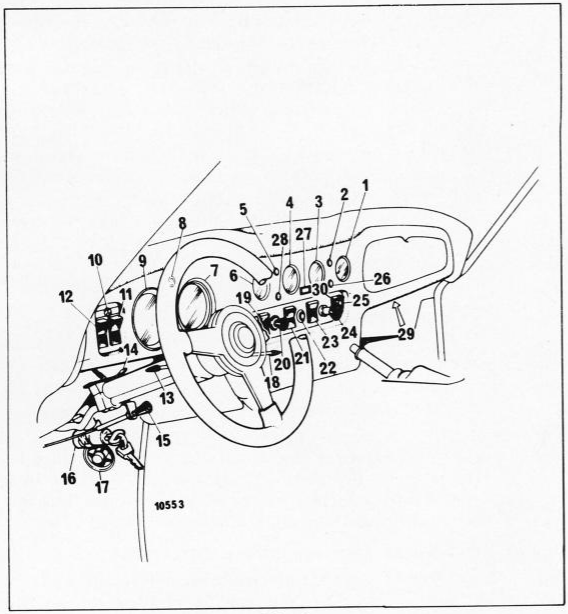

Fig. 2

LEFT HAND DRIVE (Fig. 2) (2500M U.S.A. Spec.)

1. FUEL GAUGE
2. HEATED REAR WINDOW WARNING LIGHT
3. OIL PRESSURE GAUGE
4. TEMPERATURE GAUGE (WATER)
5. MAIN BEAM WARNING LIGHT
6. BATTERY CONDITION INDICATOR
7. TACHOMETER
8. STEERING LOCK WARNING LIGHT
9. SPEEDOMETER
10. BRAKE LIGHT
11. WINDSCREEN WASHER SWITCH
12. WINDSCREEN WIPER SWITCH
13. INDICATOR SWITCH
14. HOOD RELEASE
15. HEATER VALVE CONTROL
16. IGNITION SWITCH/STEERING LOCK
17. HEATER OUTLET NOZZLE
18. DIP/MAIN BEAM AND FLASHER SWITCH
19. HEATER BLOWER SWITCH
20. CIGAR LIGHTER
21. LIGHT SWITCH
22. IGNITION LIGHT
23. PANEL LIGHT SWITCH
24. CHOKE (2500M)
25. HAZARD WARNING SWITCH
26. HAZARD WARNING LIGHT
27. 'FASTEN SEAT BELTS' WARNING LIGHT
28. INDICATOR WARNING LIGHT
29. HOOD RELEASE
30. HEATED REAR WINDOW

Brake Line Failure Indicator

When the ignition switch is turned on, the brake line failure light is illuminated. When the handbrake is released, the indicator is extinguished. Should either the front or rear brake lines fail, the indicator will glow brightly.

Temperature Gauge

When the ignition switch is turned on, the pointer moves across the dial to show a true reading.

Normal operating temperature is reached when the pointer registers in the central sector of the dial should the pointer reach the highest mark, stop the engine immediately. Check the level of the engine coolant (Refer to page 12) when the temperature has dropped below normal running temperature.

Oil Pressure Gauge

Oil pressure at 2,000 rev/min. under normal operating conditions should be 45–65 lb.in.^{2} (3.1–4.5 kg.cm^2). Severe operating conditions, such as competition work, may cause the oil pressure to drop below 25 lb.in.^{2} (1.75 kg.cm^2), indicating that the oil temperature is excessive. Under these circumstances, the fitting of an oil cooler may be necessary.

Ignition, Starter and Steering Lock Switch (Fig. 3)

The combined ignition/starter/steering lock switch is operated by a special key.

Incorporated in the switch is a 'Key Warning System'. The alarm system is fitted to encourage the driver to remove the ignition key from the lock before leaving the vehicle. (2500M only).

CONTROLS, INSTRUMENTS AND INDICATORS

Separate keys are supplied for locking the driver's door. The ignition switch has four positions as follows:–

0 'OFF', in which position the key may be inserted or withdrawn (see Key Warning System, below and page 17).

I 'Auxiliary', in which position the ignition circuit is isolated to allow the use of a radio and ancillary equipment when the vehicle is stationary and the ignition is switched off.

II 'Ignition', in which the engine ignition circuit and the auxiliary circuits are operative.

III 'Start'. Turn the key clockwise to II (Ignition) to switch on the ignition. To start the engine, turn the key a little more against spring pressure to III ('Start'). As soon as the engine fires, release the key, which will automatically return, under spring pressure to the ignition position (II).

To Stop Engine and engage Steering Lock

Turn the key anti-clockwise from the 'ignition' position (II) to the 'lock' position (0). This action stops the engine.

Removal of the key in this position automatically actuates the steering lock mechanism (see Key Warning System).

The Key Warning System only functions when the ignition key is positioned in the switch and the driver's door is open. The 'warning', denoted by a warning light, and, for the U.S.A. market only, a buzzer, will terminate when the driver's door is closed or the ignition key is completely removed.

To disengage Steering Lock and Start Engine

Insert the key and turn clockwise. If difficulty is experienced in turning the key, this can be rectified by simultaneous movement of the steering wheel.

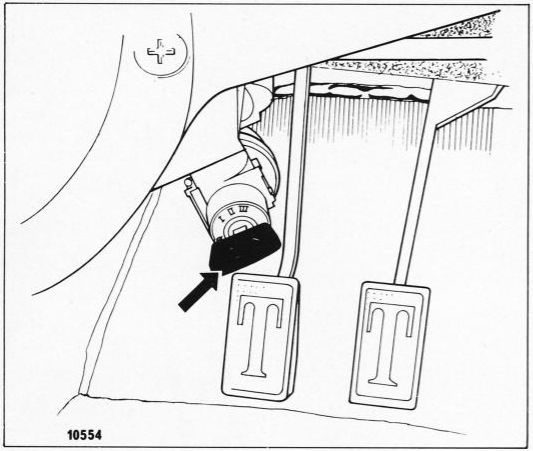

Fig. 3

Turn Signal Indicator

Indicates the correct functioning of the turn signal lights when operated by the lever. A broken filament in a bulb on one side of the vehicle is denoted by non-operation of the indicator light when the lever is in the relevant operating position. A defective flasher unit or broken filament in the indicator bulb will be indicated by no light response from the lever in both directional positions.

Lubrication of Exterior Locks

Once a month, particularly in freezing temperatures, apply a few drops of light machine oil to the latch and key slots. Do not apply grease to lock cylinders.

Hood Release

To open the hood, pull the levers situated below either side of the fascia. The hood will rise sufficiently to enable the fingers to be inserted under the rear edge. The hood can then be raised to a near vertical position. NEVER SLAM HOOD. ALWAYS PLACE IT IN POSITION AND PRESS DOWN.

SAFETY HARNESS

Wearer's Instructions

Inertia reel type safety belts are fitted before the car is delivered. The reel allows the wearer to move freely, paying out a controlled amount of webbing. After use the harness will retract for neat storage. The upper part of the webbing (from the reel) should be passed over the shoulder nearest to the door in order that the correct lap and diagonal configuration can be achieved.

To Fasten

Plug the belt buckle into the buckle unit at the side of the seat, until a positive click ensures that the belt is safely locked.

To Release

Depress the marked panel on the centre buckle unit.

Cleaning

An occasional wipe with a warm soapy sponge will keep the webbing clean. Do not use bleach or dye as they may affect the efficiency of the webbing.

Inertia Reel Mechanism Check

Every 6,000 miles (10,000 km), carry out the following road check to ensure correct seat belt operation.

IMPORTANT: Road tests must only be carried out under maximum safe conditions, i.e. level, dry road with no following or oncoming traffic.

(a) With the safety harness fitted to the driver and passenger, start the engine, accelerate the car to approximately 15 m.p.h. (24 km/h) and brake sharply.

(b) The safety belts should lock automatically, holding the wearers securely in position.

The reaction of the driver and passenger MUST be normal and the body not thrown forward in anticipation. The harness is locked by car deceleration, not body movement.

Leg Reach Adjustment (Fig. 4)

This is made by moving the lever at the front of the seat and sliding the seat to the required position. Release the lever and try to slide the seat to ensure that the lever is correctly located and the seat is secure.

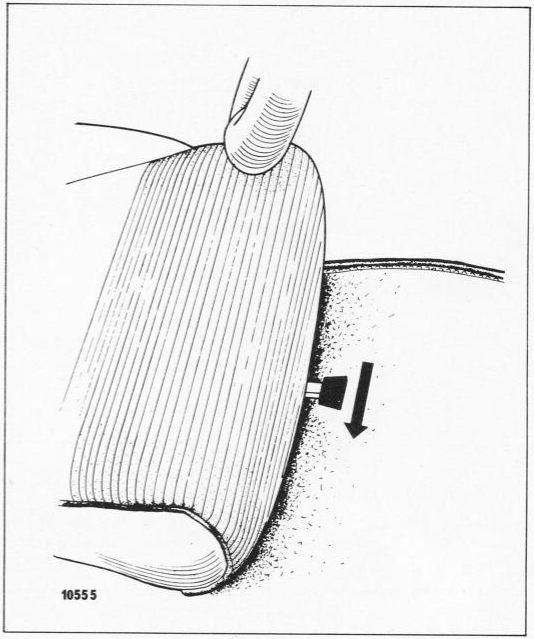

Fig. 4

TYRES

Wheels and tyres, of the correct types and pressures, are an integral part of a vehicle's design. Thus, the regular maintenance of the tyres contributes not only to the safety, but also to the designed function. Road holding, steering and braking are especially vulnerable to the use of incorrectly pressurised, badly fitted or worn tyres.

Pressures

Adjust tyre pressure in accordance with the recommendations given below. These pressures are satisfactory for sustained speed up to 112 m.p.h. (180 km/h).

	Front	Rear
185 x 14JK	22 lb.in.^{2} (1.41 kg.cm^2)	24 lb.in.^{2} (1.69 kg.cm^2)

Never bleed a warm tyre, but always adjust the pressure whilst the tyres are cold, i.e. before a run. As the tyres warm up, their pressures will increase.

To prolong tyre life, avoid severe braking, sudden changes of direction at speed, and driving over or against high kerbstones, as this can result in severe damage to the tyre walls. Examine the tyres occasionally and remove flints or other road matter which may have become embedded in the treads.

Cleaning

Wipe off any oil or grease which may be on the tyres by using a cloth moistened in petrol. The tyres should then be washed using only soap and water.

Tyre Wear

The characteristics of tyres vary considerably and, therefore, when new tyres are fitted, all four must be of the same type and rating.

Examine the tyres for sharp fins, flats and other irregularities. An upstanding, sharp fin on the edge of each pattern rib is an indication of wheel misalignment.

Fins on the inside of the pattern ribs indicate toe-in. Fins on the outside edges indicate toe-out. Sharp pattern edges may also be caused by road camber, even when wheel alignment is correct. In such cases it is better to make sure by having the track checked with an alignment gauge.

'Spotty' tread wear or flats can result from grabbing brakes or unbalanced wheel assemblies. Your TVR Dealer will check the action of the brakes and re-balance the tyres if required. The original degree of balance is not necessarily maintained, and it may be affected by uneven tread wear, by repairs, by tyre removal or refitting, or by wheel damage and eccentricities. The vehicle may also become more sensitive to imbalance caused by normal wear of moving parts.

Excessive wear in the centre of the tread results from over-inflation, in which condition the fabric is more easily damaged.

Excessive wear at the outer edges of the tread results from under-inflation, a condition which causes excessive heating and premature tyre failure.

COOLING SYSTEM

The pressurised 'no loss' cooling system incorporates a translucent plastic overflow reservoir (Fig. 5A 2500M; Fig. 5B 3000M) which collects excess coolant from the radiator as the coolant in the system expands with heat. Depression created as the system cools, causes the coolant to flow back from the reservoir into the header tank. The fluid level, which is visible through the translucent reservoir, should be maintained at least half-full when cold.

Draining (Fig. 6)

Move the heat control to the hot position, remove the header tank filler cap and disconnect the radiator bottom hose. If the engine is hot, avoid danger from scalding by taking extreme care when removing the cap and hose. If necessary remove excess pressure by way of the bleed valve on the top R.H. side of the radiator.

Flushing

Flush the cooling system once a year before adding anti-freeze. When flushing it is advisable to remove the bottom hose completely and to use plenty of clean running water.

Allowing anti-freeze solution to remain in the system throughout the summer period affords anti-corrosion protection. The solution, however, should be changed at the beginning of each winter period as the inhibitor becomes exhausted.

Filling (Fig. 7A 2500M; Fig. 7B 3000M)

Refit the radiator bottom hose and remove the filler cap. Fill the cooling system with clean (soft) water. When no more water is taken in, open the radiator bleed tap and continue filling the system until correct level is reached. Run the engine at approximately 1,500 rev/min. for 1 or 2 minutes. Top-up

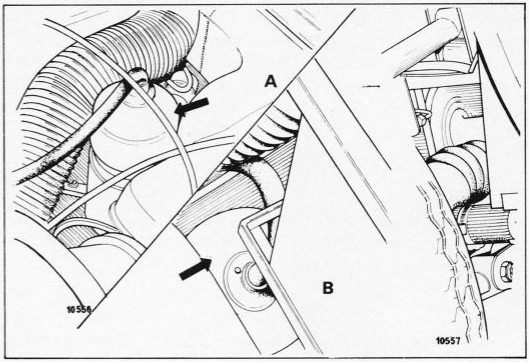

Fig. 5

the header tank and replace the cap. Completely fill the plastic overflow reservoir with clean water.

Windshield Washer

Examine the water level in the plastic windshield washer container. If required, lift off the cap and replenish the container with clean water. Under freezing conditions, fill the container with a mixture of methylated spirits (alcohol) and water, the recommended proportions being 1 part alcohol to 2 parts water. This may be used to disperse ice and snow from the windshield. Do not use cooling system anti-freeze solution in the windshield washer as this may discolour the paintwork and damage the wiper blades and sealing rubber. An Anti-Smear Solvent additive can be used to remove road film and lubricate the blades.

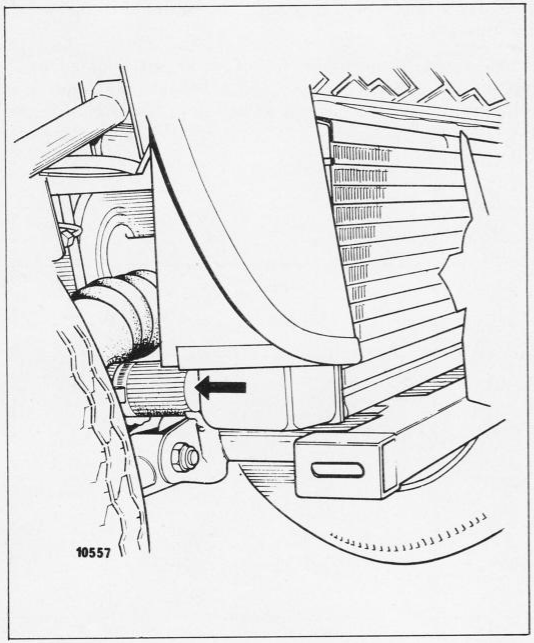

Fig. 6

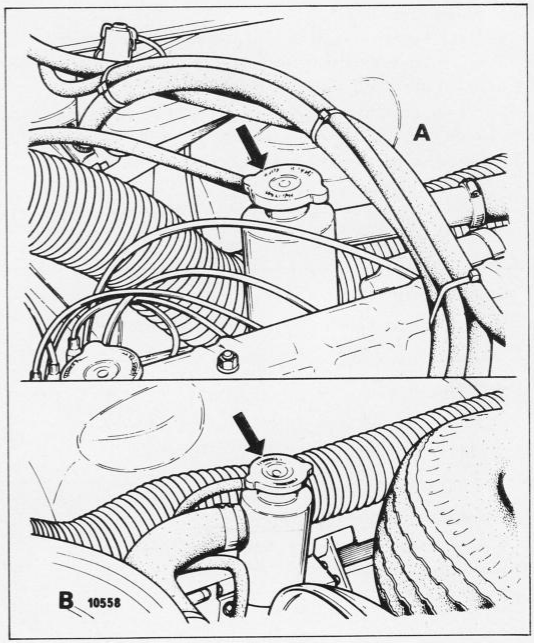

Fig. 7

Frost Precautions

The car heater cannot be completely drained by normal methods, therefore frost damage will not be prevented merely by draining the cooling system.

For your protection during freezing weather, an approved anti-freeze should be added to the coolant in the system.

Because of the searching effect of these solutions, advise your dealer to check the system for leaks before adding the anti-freeze.

At certain temperatures glycol water solutions adopt a 'mushy' state with a viscosity which impairs circulation and can immobilise or damage the water pump. Therefore, consult the following chart before adding anti-freeze, for the degree of frost protection required.

ANTI-FREEZE CONCENTRATION	25%	30%	35%
Complete Protection Vehicle may be driven away immediately from cold.	10°F (−12°C)	3°F (−16°C)	−4°F (−20°C)
Safe Limit Coolant in mushy state. Engine may be started and vehicle driven away after a short warm-up period.	0°F (−17°C)	−8°F (−22°C)	−18°F (−28°C)
Lower Protection Limit Prevents frost damage to cylinder head, block and radiator. Engine should NOT be started until thawed out.	−14°F (−22°C)	−22°F (−30°C)	−28°F (−33°C)

WIRING DIAGRAM

At the time of going to Press, the latest Wiring Diagram was unavailable for reproduction.

Fig. 8

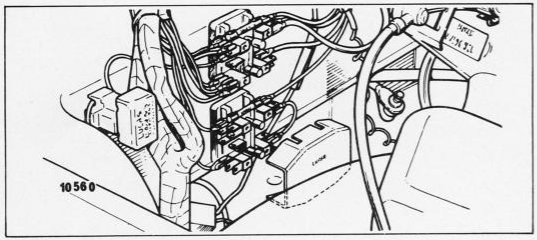

Fig. 9

FUSE SYSTEM (Fig. 9)

The fuse boxes are located at the rear of the engine compartment. Each contains two fuses, each of 35 amp. rating and a provision for two spares. The fuses are protected by a pull-off cover.

Failure of a particular fuse is indicated when all the circuits protected by it become inoperative. If a new fuse fails, establish the cause and rectify the fault before fitting a second replacement.

Circuits (Top Fuse Box)

The top fuse is fed by a purple cable from the ignition starter switch and protects the following circuits:—

Stop Lamps Reverse Lamps Windscreen Wiper Heater
Windscreen Washer Temperature Indicator Fuel Indicator

The bottom fuse is fed by a red/green cable and protects the following circuits:—

Front Parking Lamps	Tail Lamps
Front Marker Lamps	Plate Illumination
Rear Marker Lamps	Instrument Illumination

Circuits (Bottom Fuse Box)

The bottom fuse box protects the single (3000M) or double (2500M) electric cooling fans.

Line Fuses

The line fuse fed by a dark green cable, situated below the fuse boxes, protects the following circuit:—

Turn Signal Indicator

The line fuse fed by a brown cable, situated below the driver's side dash panel, protects the following circuits:—

Horn	Interior/Courtesy Illumination
Headlamp Flasher	Hazard Warning

CHARGING SYSTEM

CAUTION: THE ALTERNATOR CONTAINS POLARITY SENSITIVE COMPONENTS THAT MAY BE IRREPARABLY DAMAGED IF SUBJECTED TO INCORRECT POLARITY.

DO NOT MAKE OR BREAK ANY CONNECTIONS IN THE CHARGING CIRCUIT—INCLUDING THE BATTERY LEADS — WHILE THE ENGINE IS RUNNING OR DAMAGE TO COMPONENTS MAY OCCUR.

THE ALTERNATOR MUST ONLY BE RUN WITH ALL THE CHARGING CIRCUIT CONNECTIONS MADE OR WITH THE ALTERNATOR MULTI-SOCKET CONNECTORS DISCONNECTED. HIGH VOLTAGES MAY DAMAGE SEMI-CONDUCTOR DEVICES.

REMOVE ALTERNATOR MULTI-SOCKET CONNECTORS BEFORE PERFORMING ANY ELECTRIC ARC WELDING ON THE VEHICLE.

KEY WARNING SYSTEM (2500M only)

This system is designed to encourage the driver to remove the ignition key from the lock before leaving the vehicle. The system should prevent encouragement of theft but is not intended as a comprehensive anti-theft device.

If the driver's door is opened while the ignition key is in the lock a light will illuminate and a warning buzzer will sound. Removing the key or closing the door will cause the light to be extinguished and the buzzer to cease.

The driver's door switch contains two individual contact sets. One set controls the supply to the light and courtesy light while the second set is the key warning system. The single function passenger door switch provides an earth return for the interior lamp circuit. Refer to the wiring diagram for full circuit information.

RECOMMENDED SPEED LIMITS

Owners are advised not to drive the car at engine speeds over 5,500 rev/min. and to avoid over-reving, particularly in the lower gears.

RECOMMENDED FUEL

The engine is designed to operate on fuels having a minimum octane rating of:— 92 (Research Method) 2500M
98 (Research Method) 3000M

OVERDRIVE UNIT (When fitted) 2500M

An overdrive unit serves as a convenient method of providing, at will, a numerically lower overall gear ratio, to reduce engine speed and wear, and to effect fuel economy.

Greatest benefit will accrue from judicious use of the overdrive, the governing factor being that the vehicle continues to run easily without sign of engine labouring, combined with the minimum amount of throttle opening necessary to maintain this condition.

Do not change from overdrive at engine speeds in excess of 4,000 rev/min. This corresponds with the peak revs. in normal gears. Damage can result from overdrive disengagement at higher speed.

STARTING A HOT ENGINE

When re-starting a hot engine, depress the throttle pedal to about one-third of its travel before operating the starter. The cold start control should not be used.

RUNNING-IN

The importance of correct running-in cannot be too strongly emphasised, for, during the first few thousand miles of motoring, the working surfaces of a new engine are bedding-down. When driving from new, avoid placing heavy loads upon the engine, such as using full throttle when the engine is cold. Running-in should be progressive and no harm will result from the engine being allowed to 'rev' fairly fast for short periods provided that it is thoroughly warm and not pulling hard. Always select a lower gear if necessary to relieve the engine of load.

Full power should not be used until at least 1,000 miles (1,600 km) have been covered, and even then, it should be used only for short periods at a time. These periods can be extended as the engine becomes more responsive.

EMISSION SYSTEM

All TVR 2500M Sportscars entering the U.S.A. incorporate efficient emission control systems. These systems enable the vehicles to conform with the 1973 State and Federal Regulations governing the emission of Hydrocarbons, carbon-monoxide, nitric oxide, and the emission of fuel by evaporation from the fuel delivery system.

Fuel

The TVR 2500M (U.S.A.) performs efficiently on fuels of 92 octane (by Research Method).

NOTE: The engine is not designed to use unleaded fuels, and whilst the occasional tankful will not cause damage, constant use of unleaded fuels will result in excessive wear which will affect the emission control system.

Special Features

1. Crankcase breathing and evacuation of 'blow-by' gases is achieved by utilizing the characteristic partial vacuum in the constant depression carburettors. By this method crankcase emissions are burned in the engine combustion process. A wire gauze strainer in the engine top cover acts as an oil separator/flame trap.
2. The twin carburettors are Stromberg 175 CDSE (V) which are designed to be highly efficient and sensitive to varying conditions. The following features are incorporated:—
   (a) Jet assembly and needle biased to achieve consistent air to fuel ratio.
   (b) Temperature compensator assembly which progressively opens in line with the engine temperature to correct the mixture and maintain even running.
   (c) Throttle by-pass valve which is set to open at a predetermined manifold depression to admit air during deceleration.
   (d) 'Free-movement' built into the accelerator linkage permits fast idle without disturbing the otherwise closed position of the linkage.
   (e) Sealed cover to discourage unauthorized tampering.
3. The evaporative control system uses an activated carbon filter through which the fuel tank is vented. The following are the features of the evaporative control system:—
   (a) The carburettor float chambers are vented to the engine during open throttle conditions and to the carbon canister at closed throttle.
   (b) The carbon canister (Fig. 12) is vented to atmosphere via an anti-run-on valve. The canister is purged and prevented from vapour build-up by piping to the constant depression area of each carburettor. The crankcase breather is also linked to the above piping system via the rocker cover.
   (c) A separator pipe loop prevents fuel surges from reaching the canister and thus saturating the system.
   (d) The fuel filler cap is sealed to prevent evaporative losses.
   (e) The fuel tank filler tube extends into the tank to prevent complete filling and so allow for expansion of fuel in hot weather.

EMISSION AND EVAPORATIVE CONTROL SYSTEM – 2500M

4. A Thermostatic Vacuum Switch (Fig. 10) prevents overheating during prolonged idling, by increasing the speed of the engine, thus promoting more efficient cooling at high ambient temperatures.

System Description

A valve, located in the cooling system, is connected in the vacuum pipe, carburettor to distributor. A sensor in the coolant vents the vacuum pipe to atmosphere at 105°C (220°F). The effect is to negate the retard system, thus advancing the timing of the ignition spark and increasing the engine speed.

Servicing

No routine servicing of the system is required other than a visual check of the piping.

5. The anti-run on valve prevents the 'running-on' of the engine after the ignition is switched off, when, due to the heat of the engine, a condition of compression ignition is set up. The method of achieving a cut-off is by applying a slight 'vacuum' to the float chamber of the carburettors when the ignition is switched off.

System Description

When the ignition is switched off a solenoid is activated which operates a valve that seals off the inlet to the bottom of the carbon canister. With the inlet sealed, a connection to the inlet manifold applies a partial vacuum to the canister and consequently to the float chambers via an inter-connecting pipe. The vacuum thus applied is sufficient to prevent fuel being drawn into the engine. When the engine has stopped and the oil pressure drops to zero the solenoid is de-activated and the engine is thus ready again for operation.

Servicing

The system requires no servicing other than checking for deterioration and safe connection of the system piping.

Function Checks

If the system is not working then it will be apparent by the running-on of the engine. A system check can be made by applying current to the solenoid which, if working correctly, will stop the engine.

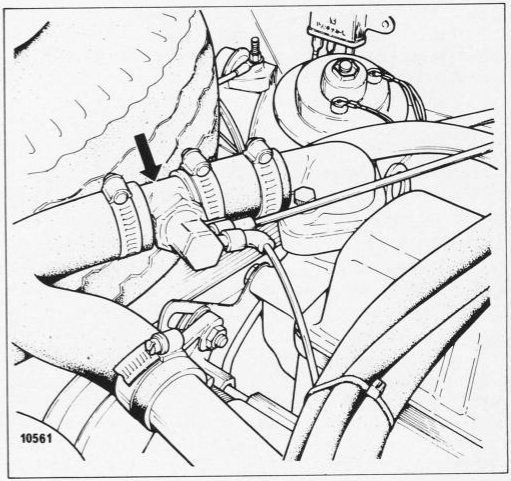

Fig. 10

EMISSION CONTROL SYSTEM – SERVICING

The importance of servicing at the correct intervals cannot be overstressed as improvements in design and manufacturing techniques count for nothing if the servicing standards are not maintained.

Routine servicing, carried out at the mileage intervals quoted in the Maintenance Summary will prevent any deterioration to the system. In addition to normal lubrication and nut tightness checks, those items which should receive attention during routine servicing include: distributor maintenance, carburettor dash-pot oil replenishment and slow running adjustment, spark plugs, valve clearances, air cleaner, crankcase ventilation and fuel filter.

To assist in the location of faults, refer to the Fault Finding Chart.

Compression Check

Use a comparison type pressure gauge to check the compression pressure of each cylinder, when the engine is warm. Maximum variation over six cylinders 5 lb.in.^{2} (0.35 kg.cm^2).

EVAPORATIVE CONTROL SYSTEM – SERVICING

Minimal servicing is required on the evaporation control system apart from renewing the carbon canister and checking visually the security of piping on the system.

CARBURETTORS

The twin Stromberg CDSE (V) 175 emission carburettors are the prime components of the emission system and great care is exercised during the manufacture and initial adjustment of these instruments. Because of the precise manufacturing limits involved and the assembly methods adopted to prevent unauthorized tampering during use, the extent of permissible servicing is restricted to the following:–

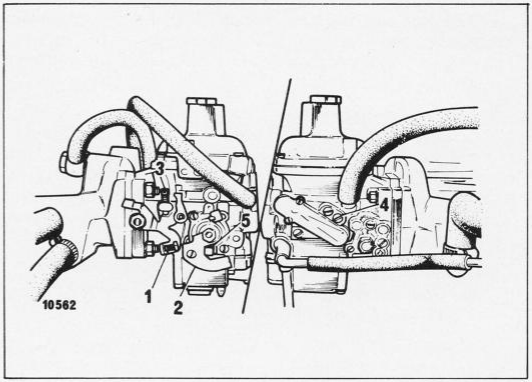

Fig. 11

Adjustments (Fig. 11)

There are only three adjustments that can be made to emission carburettors in the field and these are:–

1. **Idling Speed:** Ensure that the fast idle screw (1) is clear of the cam (2) and the choke lever is against its stop with the fascia control pushed fully-in. Unscrew the idling screw (3) until the throttle is just closed. Turn the screw 1½ turns to provide a datum setting.

   Start the engine and attain normal running temperature before final adjustment of the idling screw achieves a constant 800 to 850 rev/min.

2. **Fast Idle Speed:** Check that the mixture control cam lever (2) on both carburettors returns to its stop. Ensure that the mixture control cables are so adjusted that they are not slack or too tight. Pull the mixture control knob out on the fascia and insert a 5/16″ (7.937 mm) diameter bar between the cam and its stop (5) on both carburettors in turn. Slacken the fast idle screw locknut (1) on both carburettors and adjust the screws so that they just touch their respective cams. Remove the bar, push the control knob home and pull the control knob out again to check that the setting gives a fast idle speed of 1,100 rev/min. Make any necessary adjustments to the fast idle screw to achieve this setting whilst using the synchro check meter to maintain the carburettors in balance. Tighten the locknuts, stop the engine, push the control knob fully home and refit the air cleaner.

NOTE: If the engine is hot during the fast idle setting the speed should be 1,500 rev/min.

Idle Emission: An idle trimming screw (4) is provided to give very fine adjustment to compensate for the difference between a new 'stiff' engine and one that is 'run-in'. THIS IS NOT AN ORDINARY MIXTURE ADJUSTING SCREW; it regulates a limited amount of air that can be introduced into the mixing chamber. It is important to remember that the ear will not detect any difference between the 'fully-home' and 'fully-open' position of the screw. The setting should therefore be checked by means of a CO meter or an air/fuel ratio meter to the exhaust pipe.

Carburettor Controls

The throttle linkage rod will not require adjustments during normal operation. To ensure complete throttle closure a degree of 'lost motion' or slackness is incorporated into the linkage; no attempt must be made to adjust this out.

Occasionally lubricate the linkage and choke cable with thin oil.

Carburettor Servicing Schedules

To maintain the carburettors at peak efficiency, regular servicing as detailed in the Maintenance Summary is essential. The appropriate servicing operations should be performed by authorised dealers, who are trained in the use of the special equipment needed. At 24,000 miles (38,000 km) a carburettor overhaul using a special pack of gaskets, needle and needle valve will ensure that the emission standards are upheld throughout the following maintenance period.

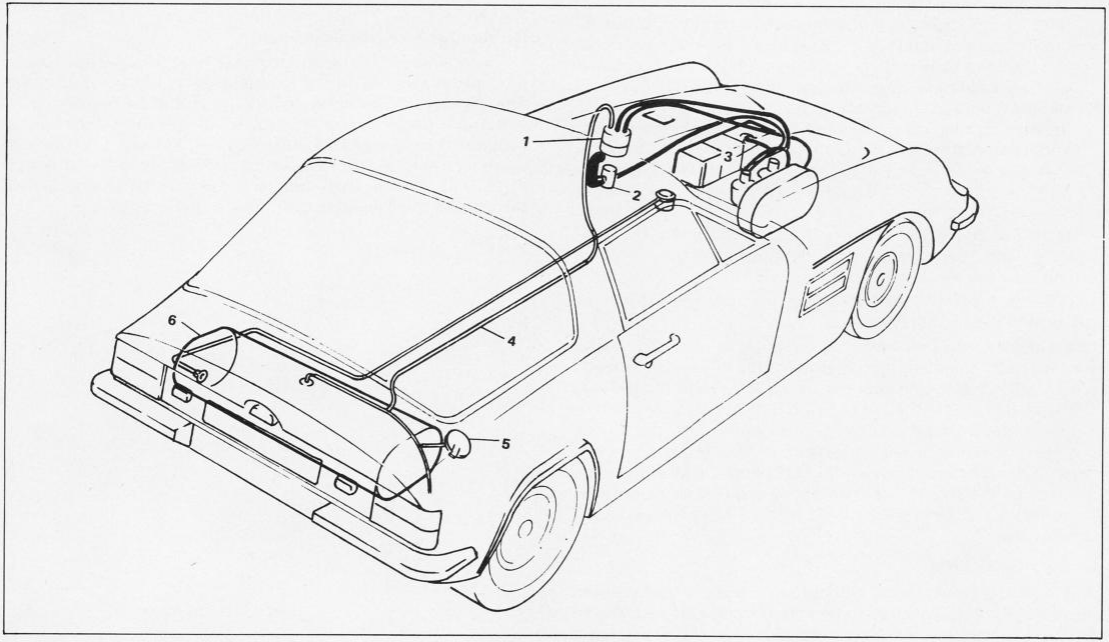

Fig. 12

EMISSION AND EVAPORATIVE SYSTEM – 2500M

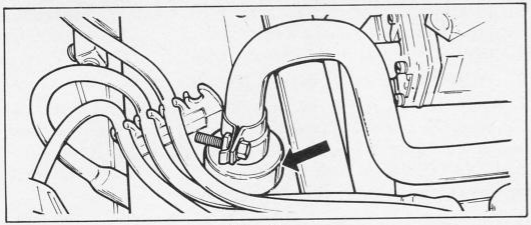

Fig. 13

CRANKCASE EMISSION CONTROL VALVE–3000M (Fig. 13)

To remove the emission control valve, disconnect the hose (A) and pull the valve (B) out of its grommet. Do not try to run the engine with the hose disconnected from the control valve, as the fuel mixture strength will be excessively weakened. Dismantle the valve by removing the circlip and extract the valve seal, valve and spring from the valve body. Wash the components in petrol to remove any sludge or lacquer that may be present. Re-assemble the components in the reverse order and refit the circlip. Push the valve back into its grommet and reconnect the hose.

ENGINE OIL LEVEL

Prior to starting out on a long run, or every 250 miles (400 km), check the engine oil level and, if necessary, add oil until the level reaches the high mark on the dipstick (Fig. 15 2500M; Fig. 14 3000M).

Before checking the level, make sure that the car is standing on level ground. The dipstick may then be withdrawn, wiped clean and pushed fully-home, before withdrawing it for reading. Should the level be at the lower mark on the dipstick the following quantities will be required to top up, via the filler cap:—2500M engine – 2 Imp.pt./2.4 U.S. pt./1.14 litres
3000M engine – 1.5 Imp.pt./1.8 U.S. pt./0.85 litres

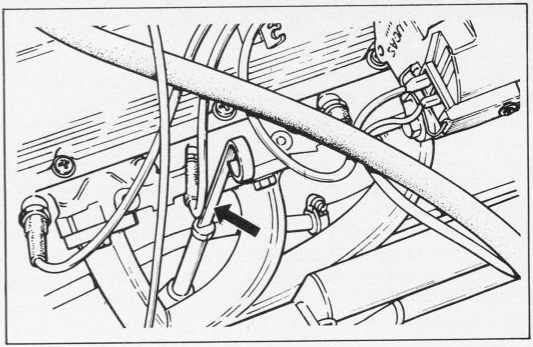

Fig. 14

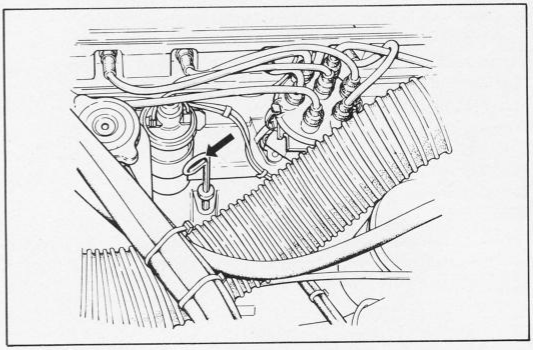

Fig. 15

BRAKE MASTER CYLINDER (Fig. 16)

Every week check the level of fluid in the brake master cylinder reservoir. The fluid level is visible through the translucent casing of the reservoir. **Do not remove the cap.** A gradual lowering of the level over a long period is caused by brake pad wear and does not require topping-up. A sudden appreciable drop in the level must be investigated, the cause ascertained and rectified immediately.

Do not allow the level to drop below the danger line on the side of the casing.

To avoid dirt entering the system, ensure that the reservoir is clean externally before removing the cap. Use only new fluid taken from a sealed container and re-seal the container after use. Replace the reservoir cap immediately after filling.

ENGINE COOLANT WATER LEVEL

The level of water, visible through the translucent plastic expansion reservoir, should be checked weekly and maintained at least half-full by adding soft water, when required, via the screwed filler cap on the header tank.

Should the expansion reservoir be allowed to empty, refill the cooling system, as described on page 12.

CAUTION: If the engine is hot, avoid danger from scalding by exercising extreme care when removing the filler cap. Turn it a half-turn and allow pressure to be fully released before completely removing the cap or release pressure by means of radiator bleed valve.

BATTERY

Examine the level of the electrolyte in the cells monthly and, if necessary, add distilled water via the filler orifices to bring the level up to the top of the separators.

CAUTION: Never use a naked light when examining the battery. The mixture of oxygen and hydrogen given off by the battery is dangerously explosive.

CLUTCH MASTER CYLINDER (2500M)

Every month, check the level of fluid in the clutch master cylinder. To prevent dirt entering the system, clean the cap and surrounding area prior to removing the cap. Top-up the fluid until it is level with the line on the side of the reservoir.

CLUTCH CABLE ADJUSTMENT (3000M)

Pull the clutch pedal hard against the back stop and retain in position with a block of wood or suitable alternative.

From underneath the vehicle, slacken the adjuster locknut and take up any slack in the system by pulling the adjuster end of the cable conduit forward. Then turn the adjusting nut until the specified clearance, 3.15–3.65 mm (0.12–0.14 in.), between the nut and the cable bush collar is obtained, and then lock the adjusting nut. Remove the block of wood from the clutch pedal and operate the pedal twice, ensuring that the pedal is fully depressed in each operation.

Measure the movement from the 'rest' to the back stop position, which should be approximately 24–27 mm (0.9–1.1 in.).

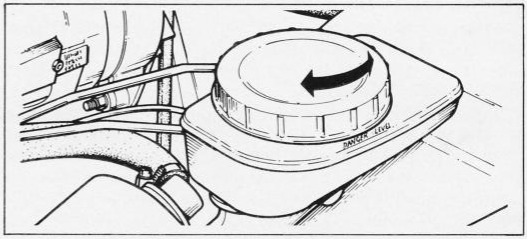

Fig. 16

ENGINE OIL CHANGE

Every 6,000 miles (10,000 km), remove the engine sump drain plug to drain the oil, refit the plug and refill to the correct level, via the filler cap. Reduce this period according to the severity of the following unfavourable conditions:—

1. Dusty roads.
2. Short journeys involving frequent stop/start driving, particularly during cold weather when greater use is made of the choke control.

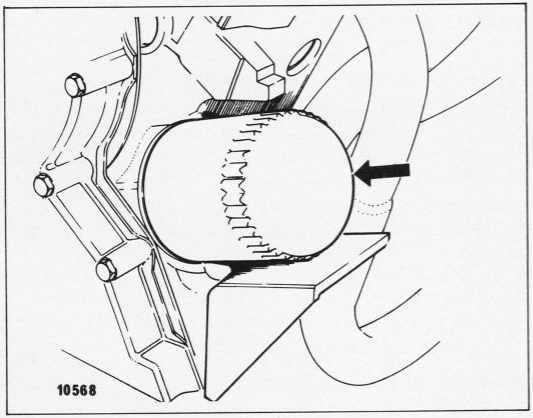

Fig. 17

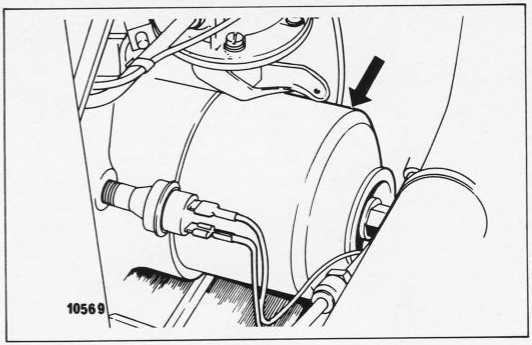

Fig. 18

ENGINE OIL FILTER ELEMENT

Every 12,000 miles (20,000 km), after draining the engine oil, unscrew the oil filter securing bolt and remove the filter bowl (2500M) or unscrew the filter cartridge (3000M). Discard the filter element, wash out the bowl and insert a new element (Fig. 17 2500M ; Fig. 18, 3000M).

Re-attach the filter bowl, ensuring that the sealing ring (2500M) is correctly fitted, or that the gasket (3000M) just contacts the mating face.

COMPRESSION CHECKS

Every 6,000 miles (10,000 km), have the compression pressures checked by your TVR Dealer. Providing that the engine is functioning satisfactorily, and the compression pressures of all cylinders are equal, you are advised not to disturb the engine.

DECARBONISING

The need for decarbonising arises when the build-up of carbon, a product of combustion, becomes excessive. If premium grade fuels and high quality lubricants are used, carbon deposit is so minimised that frequent decarbonising is unnecessary. Carbon removal may, therefore, be restricted to occasions when the cylinder head is removed for attention to the valves and seats.

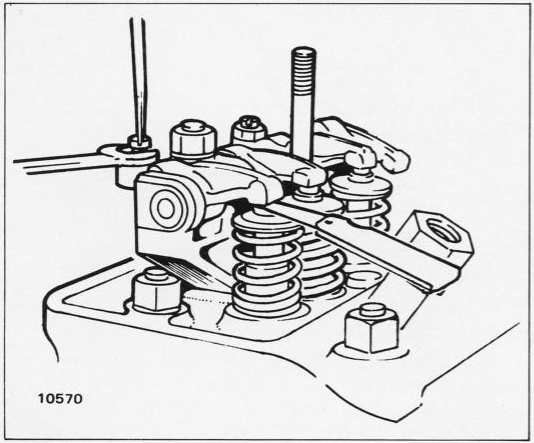

Fig. 19

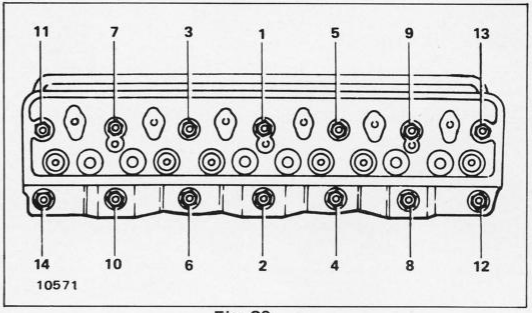

Fig. 20

VALVE CLEARANCES – ADJUSTMENT (2500M)

Every 12,000 miles (20,000 km), remove the rocker cover and, turning the engine clockwise, check and adjust the valve clearances to 0.010″ (0.25 mm), if required, in the following sequence whilst the engine is cold (Fig. 19):–

Adjust Nos. 1 and 3 valves with Nos. 10 and 12 valves open
Adjust Nos. 8 and 11 valves with Nos. 2 and 5 valves open
Adjust Nos. 4 and 6 valves with Nos. 7 and 9 valves open
Adjust Nos. 10 and 12 valves with Nos. 1 and 3 valves open
Adjust Nos. 2 and 5 valves with Nos. 8 and 11 valves open
Adjust Nos. 7 and 9 valves with Nos. 4 and 6 valves open

Refit the rocker cover.

CYLINDER HEAD NUTS (2500M)

When required, tighten the cylinder head nuts in the order shown in Fig. 20. Slacken them by reversing the sequence.

VALVE CLEARANCES – ADJUSTMENT (3000M)

Check the clearances when the engine is hot. The specified clearances are:– exhaust 0.020" (0.50 mm); inlet 0.013" (0.35 mm).

To adjust, turn the rocker retaining nut in a clockwise direction to reduce clearance and anti-clockwise to increase clearance. Adjust valves in the following order and ensure that the correct clearance is used in relation to exhaust and inlet valves (See Fig. 21).

Valves Open	Valves to Adjust
1 and 6	7 (In) and 10 (Ex)
8 and 11	4 (In) and 5 (Ex)
2 and 3	9 (In) and 12 (Ex)
7 and 10	6 (In) and 1 (Ex)
4 and 5	11 (In) and 8 (Ex)
9 and 12	2 (In) and 3 (Ex)

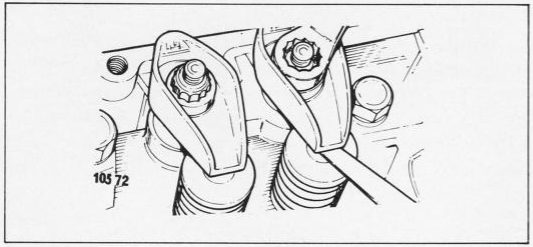

Fig. 21

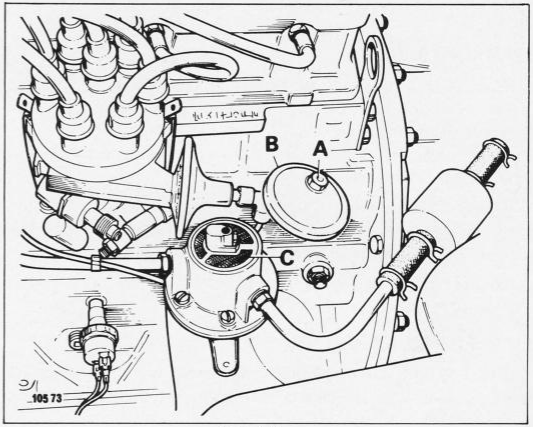

Fig. 22

FUEL PUMP (2500M) (Fig. 22)

Every 12,000 miles (20,000 km), unscrew the cover bolt (A) and remove the domed cover (B). Lift the filter (C) gauze from its seating and wash it in petrol.

Using a small screwdriver, loosen the sediment in the bowl and blow it clean by using a jet of compressed air. A foot pump used for tyre inflation is ideal for the purpose.

Renew the cork gasket if it is hardened or is broken. Assemble the filter gauze face downwards so that it can be removed easily when required.

SPARKING PLUGS

Every 6,000 miles (10,000 km), remove the sparking plugs for cleaning and reset the gaps to 0.025" (0.63 mm). Clean the ceramic insulators and examine them for cracks or other damage likely to cause 'H.T.' tracking. Test the plugs and renew those which are suspect.

Every 12,000 miles (20,000 km), renew all the sparking plugs. Ensure that they are of the correct type and that the gaps are set to 0.025" (0.63 mm).

Replace the plug leads in the same manner to that in which they were removed.

FUEL FILTER (2500M) (Fig. 22)

Every 6,000 miles (10,000 km), renew the filter, ensuring that the new filter is fitted according to the direction of flow as marked on the filter casing.

EVAPORATION SYSTEM – CARBON CANISTER (2500M)

Every 12,000 miles (20,000 km), replace the filter in the carbon canister as follows:–

Remove the inlet and purge tubes from the top of the canister. Slacken the clip securing the canister to its mounting bracket and remove the canister.

Unscrew the base cover and remove the filter gauze. Clean the base cover, fit a new gauze, replace cover and refit the canister.

Ensure that all piping is not chafing and is free from kinks.

Every 48,000 miles (80,000 km), replace the canister adopting the method described above.

ENGINE BREATHER PIPES

Every 12,000 miles (20,000 km), remove and clean the piping connecting the rocker cover to the carburettors and the carbon canister. Clean the breather oil filter or rocker cover filter in clean fuel.

IGNITION DISTRIBUTOR (2500M) (Fig. 23A)

Every 6,000 miles (10,000 km), release the clips and remove the distributor cap and rotor arm. Smear the cam (B) lightly with oil and apply a few drops of thin oil to the screw (A) in the centre of the cam, and a single drop on the contact breaker pivot (C).

Turn the engine until the contact breaker lever is operating on the highest point of the cam lobe, i.e. the gap is at its widest. Slacken the fixed contact screw (D), insert a screwdriver into the V-shaped cut-out in the contact lever and adjust the lever to obtain 0.015" (0.4 mm) gap using a feeler gauge between the contacts, and re-tighten screw. Refit the rotor and cap.

Renew worn or damaged points when required.

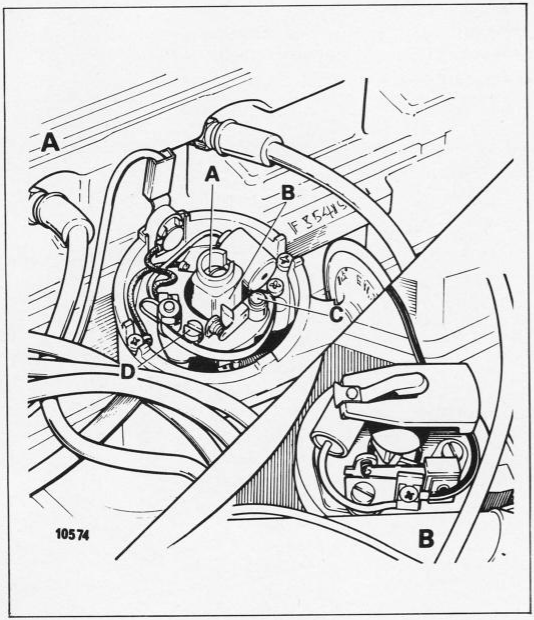

Fig. 23

IGNITION DISTRIBUTOR (3000M)(Fig. 23B)

Every 6,000 miles (10,000 km), release the clips and remove the distributor cap and rotor arm. Apply two drops of engine oil to lubrication pad inside cam body. To adjust the points gap, slacken the adjusting screws and ensure that moving contact breaker arm heel is on the highest point of the cam. Move the fixed contact point to give a clearance of 0.015" (0.4 mm), tighten adjusting screws and re-check gap. When fitting a new set of points, apply a smear of grease supplied to the cam faces.

CARBURETTOR DAMPERS (2500M) (Fig. 24)

Every 6,000 miles (10,000 km), unscrew and withdraw the plug and damper assembly from the top of both carburettors. Top-up the damper chambers with the seasonal grade of engine oil. The oil level is correct when utilising the damper as a dipstick its threaded plug is 1/4" (6 mm) above the dash pots, when resistance is felt. Refit the damper.

Using an oil can, apply oil to the throttle and choke control linkages.

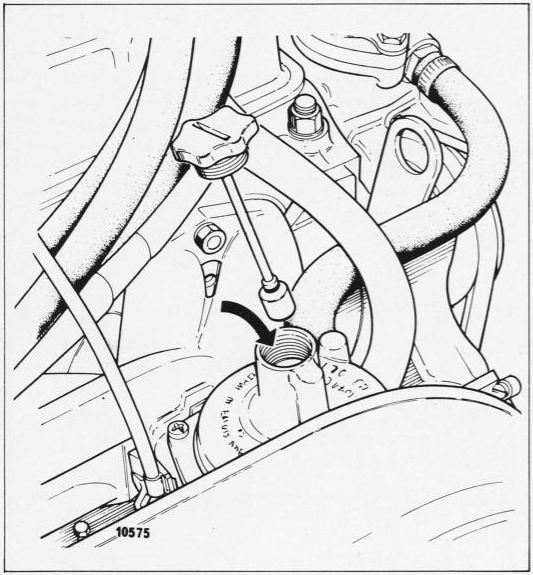

Fig. 24

ALTERNATOR DRIVE BELT (Fig. 25 2500M Illustrated)

Every 12,000 miles (20,000 km), slacken the pivot bolt and nut (1) and the adjustment bracket bolt (2). Pivot the alternator away from the engine until the belt can be moved 3/4"–1" (19–25 mm) at the mid-point of its longest run (2500M) or 1/2" (12 mm) at the mid-point between the water pump and alternator (3000M). Maintaining the alternator in the correct position, tighten the bolts and nut.

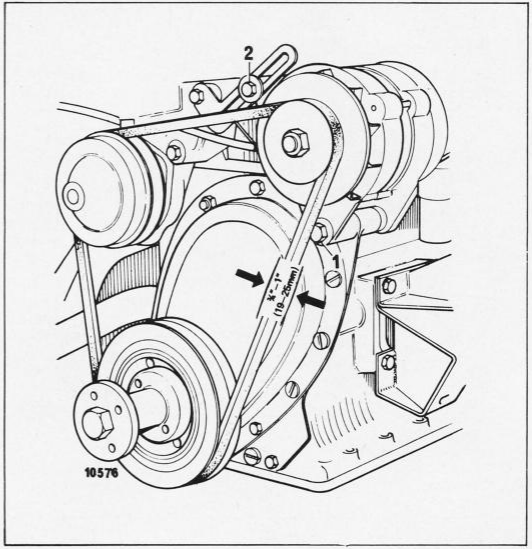

Fig. 25

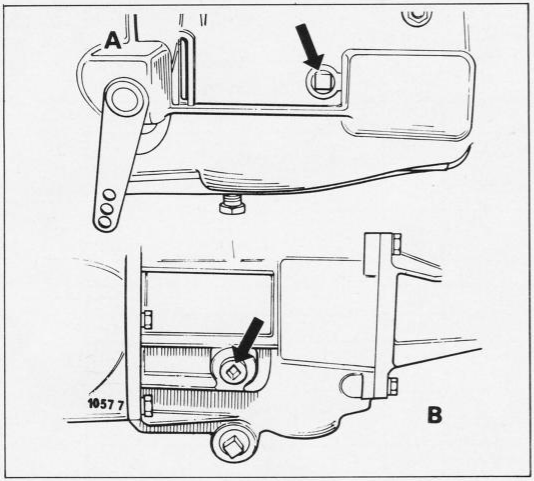

Fig. 26

TRANSMISSION (Fig. 26A, 2500M; Fig. 26B,3000M)

Every 6,000 miles (10,000 km), with the vehicle standing on level ground, remove the oil filler plug and top up the transmission until the oil is level with the bottom of the filler plug threads. Allow surplus oil to drain away before refitting the plug and wiping clean. An oil transfer hole between the transmission and overdrive unit provides a common oil level. Maintenance of the overdrive unit is thus limited to ensuring that the correct oil level is maintained in the gearbox.

REAR AXLE (Fig. 27)

Every 6,000 miles (10,000 km), remove the oil level plug and top-up the rear axle until the oil is level with the bottom of the filler threads. Allow surplus oil to drain before refitting the plug and wiping clean.

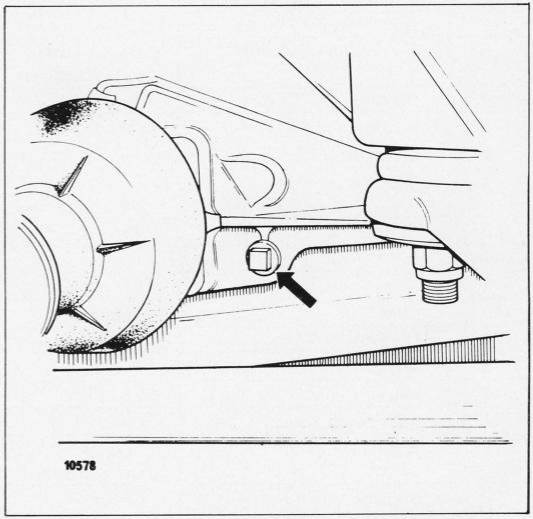

Fig. 27

MAINTENANCE CHART (2500M)

Chart Ref.	Items	Details	Page		Intervals of 1,000 miles	km
1	Upper Ball Joints	Grease	–		6	10
2	Front Hubs	Adjust	–		12	20
3	Lower Steering Swivels	Grease	–		6	10
4	Water Pump	Grease	–		12	20
5	Evaporation Canister	Renew element Renew canister	28 28		12 48	20 80
6	Radiator	Top-up	12	Weekly		
7	Breather Piping	Clean	28		12	20
8	Carburettor Dampers	Top-up	29		6	10
9	Air Cleaners	Clean element Renew element	– –		6 12	10 20
10	Battery	Top-up	24	Monthly		
11	Final Drive	Top-up	31		6	10
12	Drive Shaft	Grease	–		6	10
13	Gear Box	Top-up	31		6	10
14	Oil Filter	Renew element	25		12	20
15	Master Cylinder (Clutch)	Top-up	24	Monthly		
16	Master Cylinder (Brake)	Clean	24	Weekly		
17	Fuel Pump	Check	27		12	20
18	Engine Oil Sump	Top-up Drain and refill	25 25	Daily	 12	 20
19	Steering Unit	Grease	–		6	10

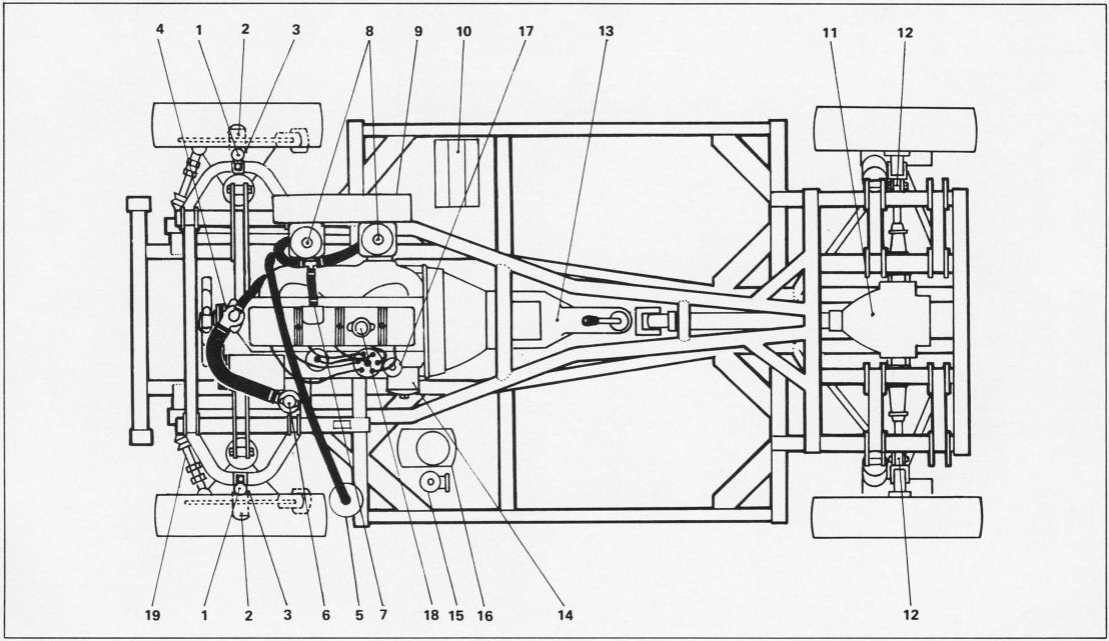

Fig. 28

MAINTENANCE CHART (3000M)

Chart Ref.	Items	Details	Page		Intervals of 1,000 miles	km
1	Upper Ball Joints	Grease	–		6	10
2	Front Hubs	Adjust	–		12	20
3	Lower Steering Swivels	Grease	–		6	10
4	Water Pump	Grease	–		12	20
5	Crankcase Emission Valve	Clean	23		18	30
6	Radiator	Top-up	12	Weekly		
7	Air Cleaner	Clean			6	10
		Renew element	–		18	30
8	Battery	Top-up	24	Monthly		
9	Final Drive	Top-up	31		6	10
10	Drive Shaft	Grease	–		6	10
11	Gear Box	Top-up	31		6	10
12	Oil Filter	Renew element	25		6	10
13	Clutch Cable	Check and adjust	24		6	10
14	Master Cylinder (Brake)	Clean	24	Weekly		
15	Engine Oil Sump	Top-up	25	Daily		
		Drain and refill	25		6	10
16	Steering Unit	Grease	–		6	10

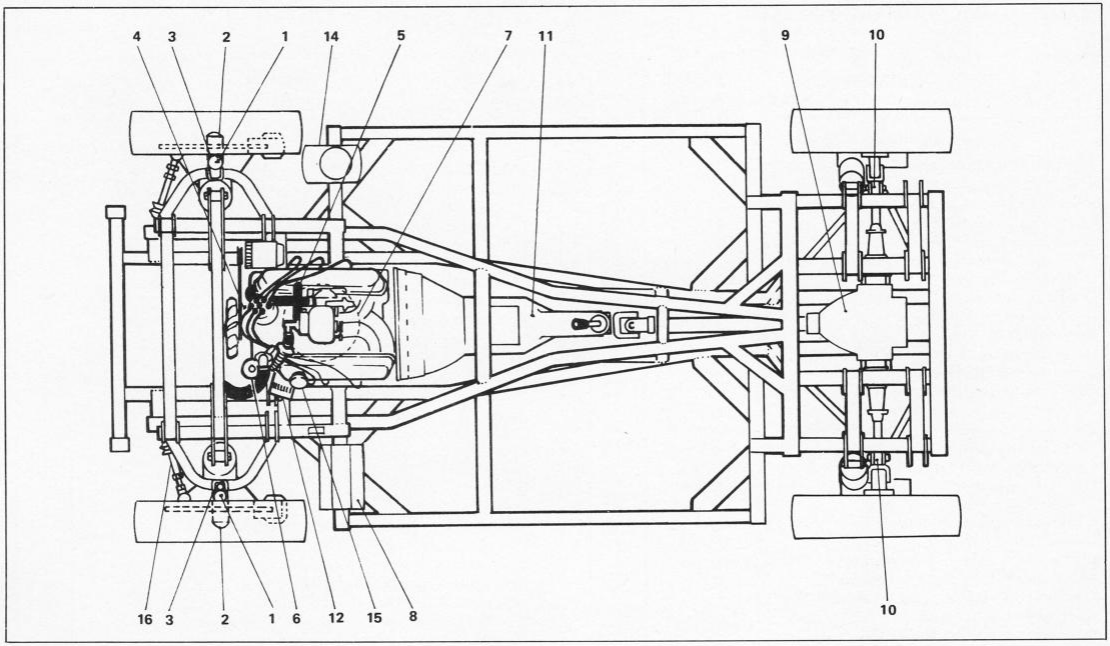

Fig. 29

MAINTENANCE SUMMARY TVR 2500M

Interval in miles X 1,000	3	6	12
Interval in Kilometres X 1,000	5	10	20
DESCRIPTION			
ENGINE COMPARTMENT			
Check/top up engine oil level	x		
Check/top up cooling system	x	x	x
Check/top up brake fluid reservoir	x	x	x
Check/top up clutch fluid reservoir	x	x	x
Check/top up windscreen fluid reservoir	x	x	x
Check/top up battery	x	x	x
Check/top up carburettor piston(s) damper(s) (E)		x	x
Drain engine oil and refill		x	x
Renew oil filter element			x
Clean fuel pump sediment bowl and filter gauze			x
Lubricate distributor and check automatic advance (E) ..		x	x
Check/adjust/report condition of distributor points (E) ..		x	
Renew distributor points (E)			x
Check/adjust ignition timing using electronic equipment (E)		x	x
Check/report ignition wiring for fraying, chafing and deterioration (E)		x	x
Check condenser and coil for breakdown on oscillascope tube (E)		x	x
Clean/adjust sparking plugs (E)		x	
Renew sparking plugs (E)			x
Check/adjust torque of cylinder head nuts/bolts (E) ..			
Check/report cylinder compression (E)		x	x
Check/adjust valve rocker clearances (E)			x
Clean engine oil filler cap			x
Clean carburettor air cleaner element(s) (E)		x	
Renew carburettor air cleaner element(s) (E)			x
Check/adjust/report condition of all driving belts	x	x	x

Interval in miles X 1,000	3	6	12
Interval in Kilometres X 1,000	5	10	20
DESCRIPTION			
ENGINE COMPARTMENT (continued)			
Check security of starter motor and alternator retaining bolts			
Check security of engine mountings			
Check/adjust carburettor settings (E)		x	x
Overhaul carburettor – at 24,000 miles (E)			
Renew fuel line filter (E)			x
Check fuel system for leaks (E)	x	x	x
Lubricate accelerator linkage/pedal fulcrum and check operation		x	x
Check battery condition; Clean and grease connections ..		x	x
Check/report for oil/fuel/fluid leaks (general) (E)	x	x	x
Check/report leaks from cooling and heater systems ..	x	x	x
Evaporative and crankcase ventilation systems:—			
Check hoses and restrictors for blockage, security and deterioration (E)		x	x
Renew carbon canister at 24,000 miles (E)			
UNDERBODY			
Check/top up level of gearbox (and overdrive) oil		x	x
Check/top up level of final drive unit oil		x	x
Lubricate lower steering swivel		x	x
Lubricate all grease points except hubs		x	x
Lubricate steering rack and pinion		x	x
Lubricate handbrake linkage and cable guides		x	x
Lubricate exposed automatic transmission selector linkages		x	x
Check engine, transmission, final drive, suspension and steering unit for oil leaks and report	x	x	x

Interval in miles X 1,000	3	6	12
Interval in Kilometres X 1,000	5	10	20
DESCRIPTION			
UNDERBODY (continued)			
Check visually brake, clutch and fuel pipes, hoses and unions for chafing, leaks and corrosion and report	x	x	x
Check/report exhaust system for leakage and security (E) ..	x	x	x
Check security of suspension fixings, tie rod levers, steering unit attachments and steering universal joint coupling bolts			x
Check security of propellor shaft and drive shaft universal coupling bolts and report drive shaft gaiter condition ..			x
Check security of sub-frame or body mountings			
Check/report condition of steering unit/steering joints for security, backlash and gaiter condition	x	x	x
EXTERIOR			
Adjust front hubs			x
Check/adjust front and rear wheel alignment with tracking equipment			
Check/report front and rear wheel alignment with tracking equipment		x	x
Inspect brake pads for wear and discs for condition ..	x	x	x
Inspect and report brake linings for wear and drums for condition			x
Renew hydraulic brake fluid at 18,000 miles (or 3 years) ..			
At 36,000 miles (or 3 years):—			
Examine brake and clutch systems, seals and hoses and renew if necessary			
Examine working surfaces of pistons and bores in master, slave and wheel cylinders and renew pads where necessary			
Renew air filter in brake servo unit			
Renew all water hoses			
Check/adjust security of road wheel fastenings	x	x	x

NOTE: (E) Denotes Emission Equipment.

Interval in miles X 1,000	3	6	12
Interval in Kilometres X 1,000	5	10	20
DESCRIPTION			
EXTERIOR (continued)			
Check that tyres are in accordance with manufacturer's specification	x	x	x
Check visually and report depth of tread, cuts in tyre fabric, exposure of ply or cord structure, lumps or bulges ..	x	x	x
Check/adjust tyre pressures (including spare wheel) ..	x	x	x
Check/adjust headlamp alignment			
Check/report headlamp alignment	x	x	x
Check, if necessary replace, windscreen wiper blades ..	x	x	x
Check fuel tank filler cap seal for security (E)		x	x
***Important**—If the tyres do not conform with legal requirements report to the owner			
INTERIOR			
Check brake pedal travel and handbrake operation, adjust if necessary			
Check/report brake pedal travel and handbrake operation ..	x	x	x
Check operation of window controls, locks and bonnet release			
Check function of all electrical systems and windscreen washer	x	x	x
Lubricate brake and clutch pedal pivots		x	x
Lubricate all locks, door hinges, strikers and bonnet release		x	x
Check/report condition and security of seats and seat belts ..	x	x	x
Check/report rear view mirrors for looseness, cracks and crazing	x	x	x
ROAD TEST			
Road/roller test and report additional work required ..		x	x
Ensure cleanliness of controls, door handles, steering wheel, etc.	x	x	x

RECOMMENDED LUBRICANTS AND ANTI-FREEZE SOLUTIONS

	Lubricant	Castrol	Shell	Esso	Mobil	Duckhams
ENGINE	20/50	Castrol GTX	Shell Súper	Esso Uniflo	Mobiloil Super	Q20–50
GEARBOX	SAE 90EP Oil (2500M)	Castrol Hypoy	Shell Spirax 90EP	Esso Gear Oil GX90/140	Mobilube GX90	90EP
	SAE 80EP Oil (3000M)	Castrol Hypoy Light	Shell Spirax 80EP	Esso Gear Oil GX80	Mobilube GX80	80EP
DIFFERENTIAL	SAE 90EP Oil	Castrol Hypoy	Shell Spirax 90EP	Esso Gear Oil GX90/140	Mobilube GX90	90EP
GREASE POINTS	Lithium-based multi-purpose grease	Castrol GM Grease	Shell Retinax A	Esso Multi-purpose Grease H	Mobilgrease MP	L2
WHEEL HUBS	Lithium-based multi-purpose grease	Castrol GM Grease	Shell Retinax A	Esso Multi-purpose Grease H	Mobilgrease MP	L2
CLUTCH AND BRAKE RESERVOIRS	Castrol—Girling brake and clutch fluid (crimson); where this proprietary brand is not available, other fluids which meet SAE J1703 may be used.					
APPROVED ANTI-FREEZE SOLUTIONS	Smith Bluecol Fina Thermidor Ford Anti-freeze Plus (Spec. M97B18-C)	B.P. Anti-freeze Shellzone Anti-freeze	Castrol Anti-freeze Stardex	Duckhams Anti-freeze	Esso Anti-freeze	Mobil Anti-freeze

Where these proprietary brands are not available, others which meet BS1 3151 or 3152 may be used.

FAULT FINDING

SYMPTOM												CAUSE	ACTION
Poor/Rough Idle	Loss of Power/Poor Drive Away	Misfiring (Under load conditions)	High Fuel Consumption	High Idling Speed	Overheating (at idle speed)	Lean Running	Arcing at Plugs	Smell of Fuel	Rich Mixture	Stalling	Engine Run-on		
X	X	X										Distributor C.B. Points	Check dwell angle/check gap and reset/renew points
X	X	X										Sparking Plugs	Check gap and reset/renew defective plug
X	X	X					X					Ignition Wiring	Inspect for fraying, chafing and deterioration/renew
X	X		X									Choke Mechanism	Check fast idle adjustment/cam and cable/adjust
X	X		X									Choke Mechanism	Remove starter box and clean interface
X	X			X						X		Vacuum fittings, Hoses and Connections	Check piping condition and security/renew as necessary
X	X					X						Oil Filler Cap	Check for security/tighten cap
X	X					X						Ventilation Hoses	Check hoses for security, blockage and deterioration
X			X									Carburettor	See Carburettor Fault Finding Chart
	X											Distributor	Lubricate/check operation by removing pipe and noting rev/min.
	X		X									Carburettor Air Cleaner	Clean or renew element
	X			X	X							Ignition Timing and Advance Systems	Check and reset dynamic timing
		(X)										Condenser and Coil	Check for breakdown on oscilloscope tube
			X					X				Hose Connections	Check for hose damage and deterioration
									X			Carbon Storage Canister	Renew canister
					(X)							Thermostatic Switch	Check switch operation and renew if necessary
											X	Running-on Control Valve	Check valve operation and renew if necessary

FAULT FINDING – EMISSION CARBURETTOR

NOTE: Before undertaking extensive carburettor servicing it is recommended that other engine factors and components such as cylinder compressions, valve clearances, distributor, sparking plugs, and intake temperature control system etc., are checked for correctness of operation.

SYMPTOM	CAUSE	ACTION
1. Poor idle quality.	a Air leakage of induction manifold joints	Remake joints as necessary. Check idle carbon monoxide level with CO meter.
	b Throttles not synchronized	Re-balance carburettors and reset linkage.
	c Air valve or valves sticking in piston guide rods	Clean air valve rods and guides and reassemble. Check piston free movement by hand unit should move freely and return carburettor bridge with an audible click.
	d Partially or fully obstructed float chamber or diaphragm ventilation holes	Check that gasket(s) are not causing obstruction or piping obstructed.
	e Incorrect fuel level caused by maladjusted float assemblies or worn or dirty needle valve	Reset float heights and clean or replace needle valves worn.
	f Metering needle incorrectly fitted or wrong type	Ensure shoulder of needle is flush with face of air valve and that needle bias is correct.
	g Diaphragm incorrectly located or damaged	Check location with air valve cover removed, piston depression holes should be in line with and face towards the throttle spindle. Renew diaphragm with correct type if damage is in evidence.
	h Leakage from retard pipe connections	Remake connections and recheck ignition settings.
	i Temperature compensator faulty	With engine and carburettor cold check that compensator cone is seated and free to move off seat. If any doubt exists, replace unit with new assembly.
	j After considerable service leakage may occur at throttle spindle or secondary throttle spindles.	Replace spindle seals or spindles as required.

SYMPTOM	CAUSE	ACTION
2. Hesitation or 'flat spot' a, b, c, d, e, f, g and h plus	Piston damper inoperative	Check damper oil level and top up with specified oil: recheck damper operation by raising piston by hand, whereupon resistance should be felt.
	Air valve spring missing or wrong part fitted	Check correct grade of spring and refit as required.
	Ignition timing incorrect	Check and reset as required.
	Throttle linkage operation incorrect	Check operation of linkage between carburettors and operation of secondary throttle links: reset or replace parts as required.
3. Heavy fuel consumption 1 and 2 plus	Leakage from the fuel connections, float chamber joints or sealing plug 'O' rings.	Replace gaskets and 'O' rings as required.
	Faulty by-pass valve	Replace by-pass valve with new unit.
4. Lack of engine braking	Sticking throttles	Check throttle operation and reset as required.
	Ignition retard inoperative	Check ignition setting at idle and ensure correct functioning of retard system.
5. Lack of engine power	Damaged diaphragm	Inspect and replace if incorrectly fitted or damaged.
	Low fuel flow	Check discharge from fuel pump. Inspect needle valve seating.

NOTE: To ensure compliance with exhaust emission legislative requirements the following items MUST NOT be changed or modified in any way.

The fuel jet assembly; the air valve; the depression cover; the position of the fuel metering needle.

The following items must not be adjusted in service but should be replaced completely by factory-set units.

The temperature compensator; the air valve return spring; the by-pass unit; the starter assembly.

ABBREVIATED SPECIFICATION

Engine	2500M	3000M
Number of cylinders	6 (Straight)	V6
Cubic capacity	2498cc. (152 in^3)	2992 cc.
Valve clearance		
Inlet	0.25mm (0.010in.) Cold	0.35mm (0.13in.) Hot
Exhaust	0.25mm (0.010in.)	0.50mm (0.20in.)
Sparking plugs	Champion UN-12Y	Motorcraft AGR22 (14mm)
Contact breaker gap	0.4 mm (0.015 in.)	0.4 mm (0.015 in.)

Electrical System	
Voltage	12
Polarity	Negative earth

Chassis Data	
Wheelbase	7ft. 6in. (2286mm)
Track	
Front	4ft. 5.3/4in. (1365mm)
Rear	4ft. 5.3/4in. (1365mm)
Ground clearance	5in. (127mm)
Turning circle	35ft. 9in. (10.56m)

Capacities	Imperial	Metric	U.S.A.
Fuel tank	2500M 12gal.	54.55 litres	14.4gal.
	3000M 15gal.	68.2 litres	18gal.
Engine sump			
2500M	8 pt.	4.55 litres	9.64gal.
3000M	8,8 pt.	5.0 litres	10.56gal.
Gearbox (from dry)			
2500M	2 pt.	1.13 litres	2.4pt.
3000M	2.91 pt.	1.66 litres	3.49pt.
Gearbox/Overdrive (2500M)	3½ pt.	2.0 litres	4.2pt.
Rear axle (from dry)	2½ pt.	1.42 litres	3.0pt.
Cooling system (inc. water bottle) with heater	2500M 15pts.	8.4 litres	18pt.
	3000M 19pts.	10.8 litres	22.8pt.

Exterior Dimensions	
Overall length	12ft. 10in. (4165mm)
Width	5ft. 4in. (1645mm)
Height	4ft. (1219mm)

Wheels & Tyres	
	6in. JK x 14in. Dia. TVR Aluminium Alloy
	185 x 14 Radial

	Page
Abbreviated specification	42
Alternator drive belt	30
Battery	24
Brake line failure indicator	8
Brake master cylinder	24
Carbon canister	28
Carburettors	20
Carburettor dampers – 2500M	29
Charging system	16
Clutch cable adjustment – 3000M	24
Clutch master cylinder – 2500M	24
Compression checks	25
Cooling system	12
Crankcase emission control valve – 3000M	23
Cylinder head nuts	26
Decarbonising	26
Emission control system – servicing	20
Emission system	18
Engine breather pipes	28
Engine coolant water level	24
Engine oil change	25
Engine oil level	23
Evaporative system – servicing	20
Frost precautions	14
Fuel filter	28
Fuel pump – 2500M	27
Fuse system	16
Hood release	9
Ignition distributor – 2500M	28
Ignition distributor – 3000M	29
Ignition/starter switch	8
Key warning system	17
Lubrication of locks	9
Maintenance chart – 2500M	32
Maintenance chart – 3000M	34
Maintenance summary – 2500M	36
Oil filter elements	25
Oil pressure gauge	8
Overdrive unit	17
Rear axle	31
Recommended fuel	17
Recommended lubricants	38
Recommended speed limits	17
Safety harness	9
Seats (leg reach adjustment)	10
Sparking plugs	28
Starting a hot engine	17
Temperature gauge	8
Transmission oil	31
Turn signal indicator	9
Tyres	11
Valve clearance – adjustment – 2500M	26
Valve clearance – adjustment – 3000M	27
Windshield washer	12

Produced by D. FAIR PUBLICATIONS LTD., Coventry J1241/4/73
Printed in England.